CS 457 – Lecture 9
ATM and
Switch Implementations

Fall 2011

Recall: Introduced Switches

- Switch breaks subnet into LAN segments
- Switch filters packets
  - Frame only forwarded to the necessary segments
  - Segments become separate collision domains
  - **Bridge**: a switch that connects two LAN segments

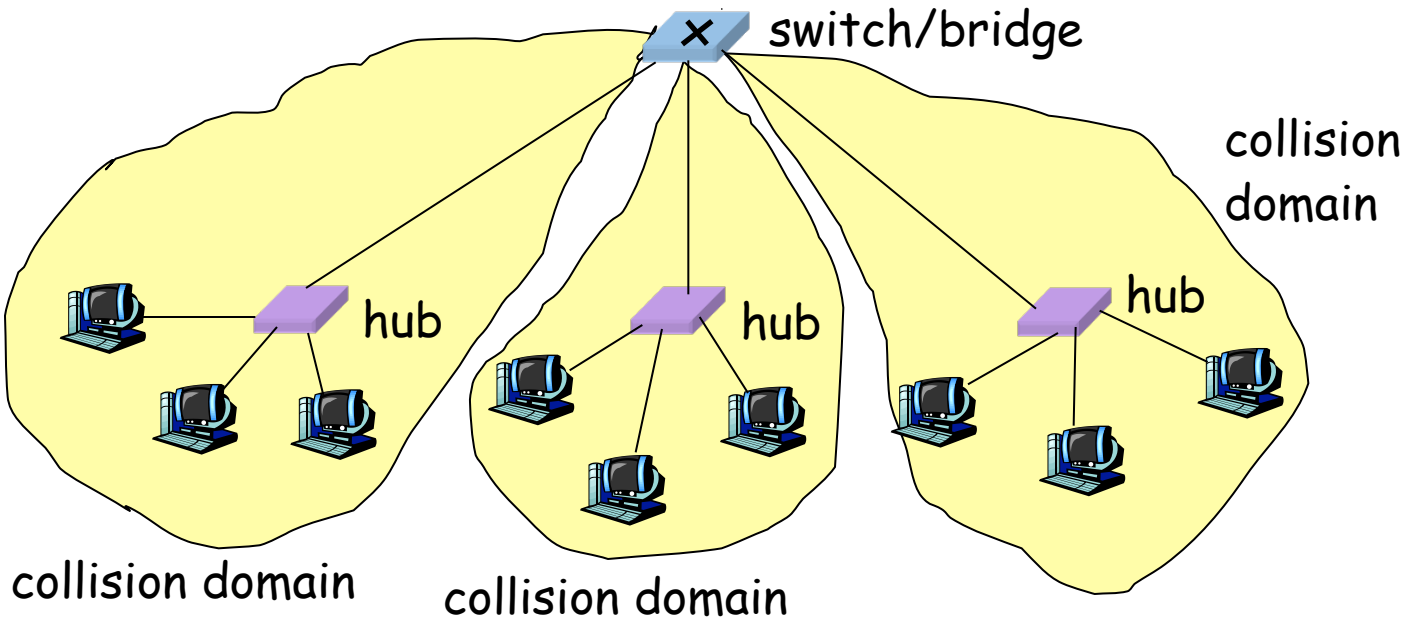

Constructing a Spanning Tree

- Need a distributed algorithm
  - Switches cooperate to build the spanning tree
  - … and adapt automatically when failures occur
- Key ingredients of the algorithm
  - Switches need to elect a "root"
    - The switch with the smallest identifier
  - Each switch identifies if its interface is on the shortest path from the root
    - And exclude it from the tree if not
  - Messages (Y, d, X)
    - From node X
    - Claiming Y is the root
    - And the distance is d

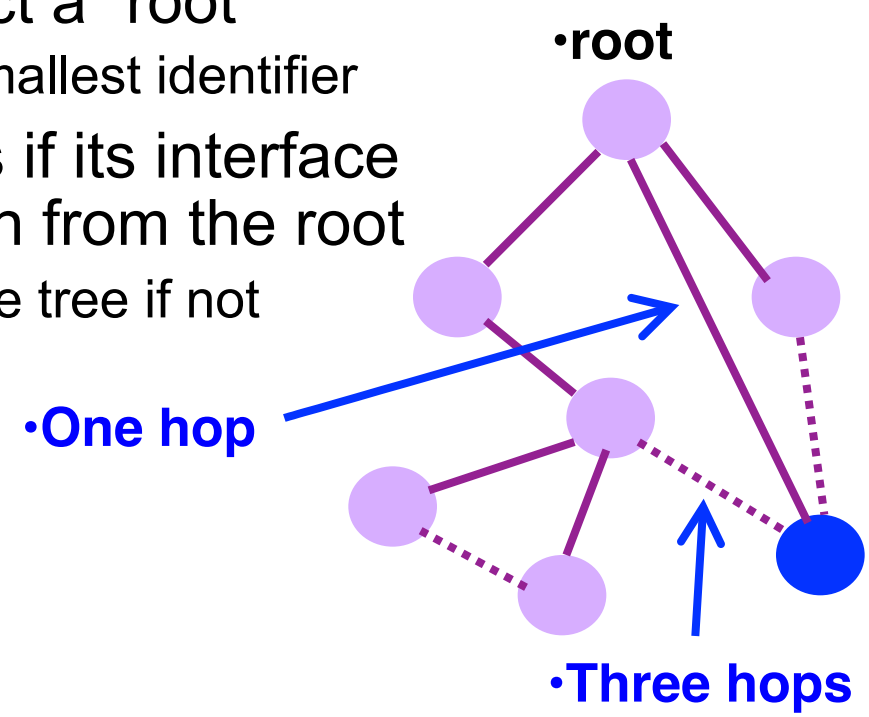

Datagram networks

- no call setup before sending data
- Switches:no state about end-to-end connections
  - no network-level concept of “connection”
- packets forwarded using destination host address
  - packets between same source-dest pair may take different paths

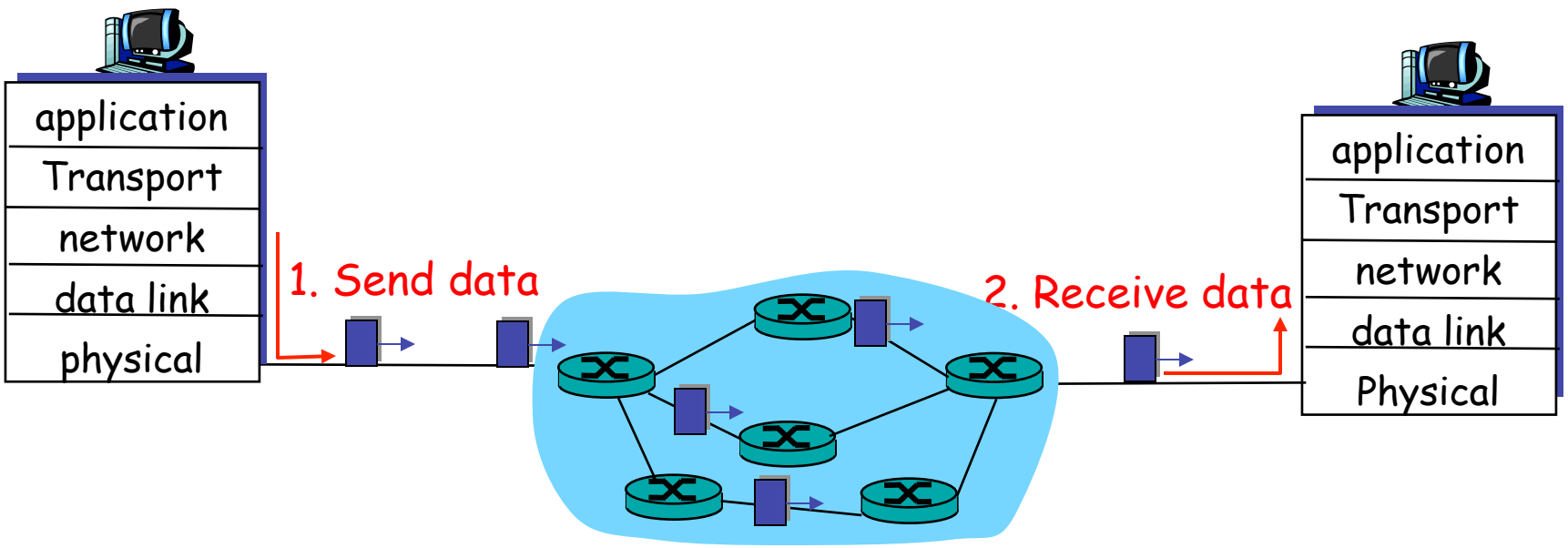

Virtual circuits: Signaling Protocols

- used to setup, maintain teardown VC
- used in ATM, frame-relay, X.25
- ***<u>An alternative to spanning trees/Ethernet switching</u>***

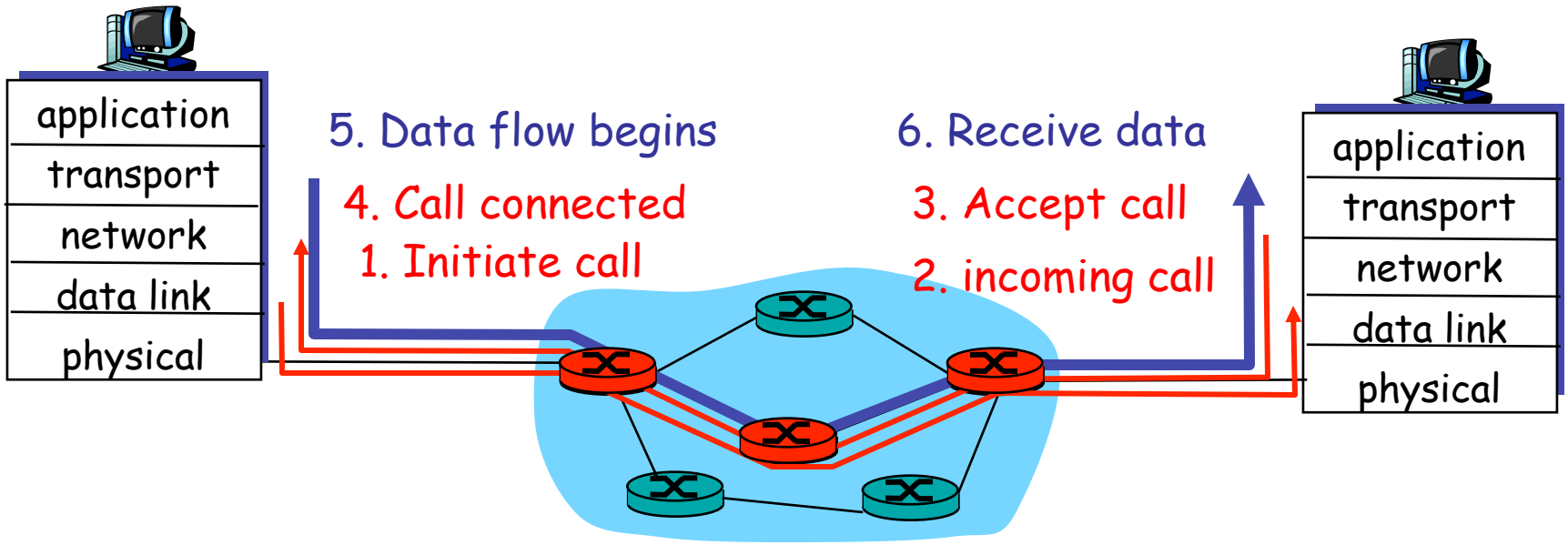

Datagram or Virtual Circuits

Internet

- data exchange among computers
  - “elastic” service, no strict timing req.
- “smart” end systems (computers)
  - can adapt, perform control, error recovery
  - simple inside network, complexity at “edge”
- many link types
  - different characteristics
  - uniform service difficult

ATM

- evolved from telephony
- human conversation:
  - strict timing, reliability requirements
  - need for guaranteed service
- “dumb” end systems
  - telephones
  - complexity inside network

Virtual circuits

"source-to-dest path behaves much like telephone circuit"

- performance-wise
- network actions along source-to-dest path

- call setup, teardown for each call *before* data can flow
- each packet carries VC identifier (not destination host address)
- *every* router on source-dest path maintains "state" for each passing connection
- link, router resources (bandwidth, buffers) may be *allocated* to VC

VC implementation

A VC consists of:

1. Path from source to destination
2. VC numbers, one number for each link along path
3. Entries in forwarding tables in routers along path

- Packet belonging to VC carries a VC number.
- VC number must be changed on each link.
  - New VC number comes from forwarding table

Forwarding table

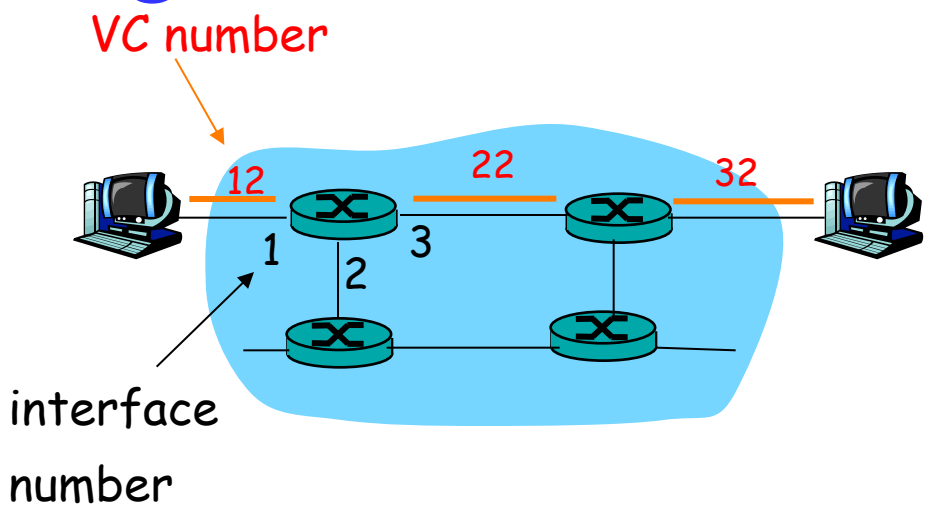

Forwarding table in Northwest switch:

•Incoming interface	Incoming VC #	Outgoing interface	Outgoing VC #
1	12	2	22
2	63	1	18
3	7	2	17
1	97	3	87
…	…	…	…

Switches maintain connection state information!

Asynchronous Transfer Mode: ATM

- **1990's standard for high-speed** (155Mbps to 622 Mbps and higher) *Broadband Integrated Service Digital Network* architecture
- Goal: *integrated, end-end transport of carry voice, video, data*
  - meeting timing/QoS requirements of voice, video (versus Internet best-effort model)
  - "next generation" telephony: technical roots in telephone world
  - packet-switching (fixed length packets, called "cells") using virtual circuits

ATM architecture

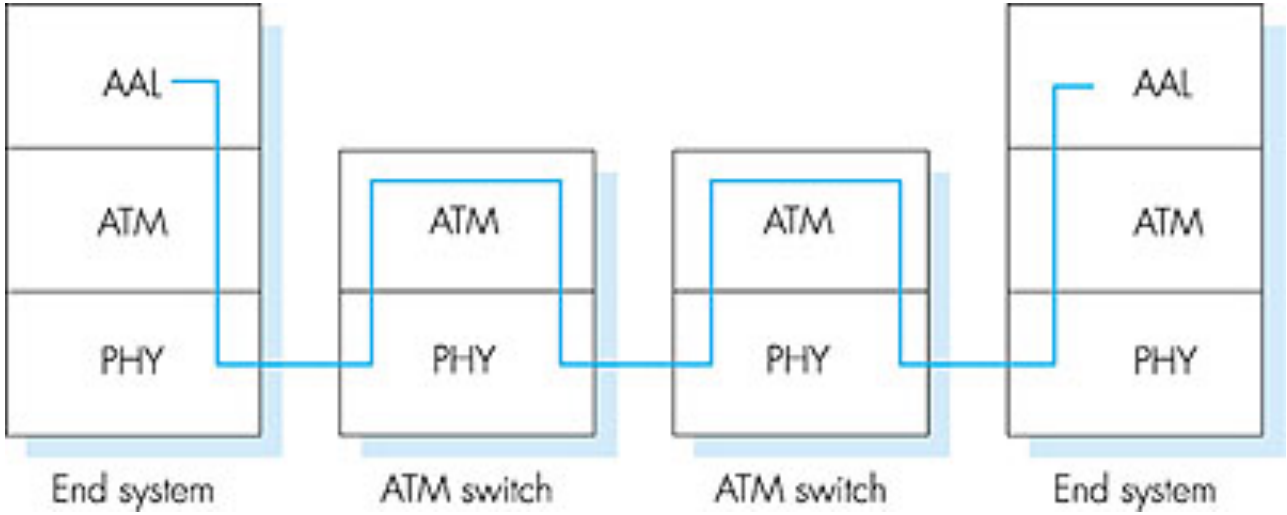

- adaptation layer: only at edge of ATM network
  - data segmentation/reassembly
  - roughly analagous to Internet transport layer
- ATM layer: “network” layer
  - cell switching, routing
- physical layer

ATM Adaptation Layer (AAL)

- ATM **Adaptation Layer** (AAL): “adapts” upper layers (IP or native ATM applications) to ATM layer below
- AAL present **only in end systems**, not in switches
- AAL layer segment (header/trailer fields, data) fragmented across multiple ATM cells
  - analogy: TCP segment in many IP packets

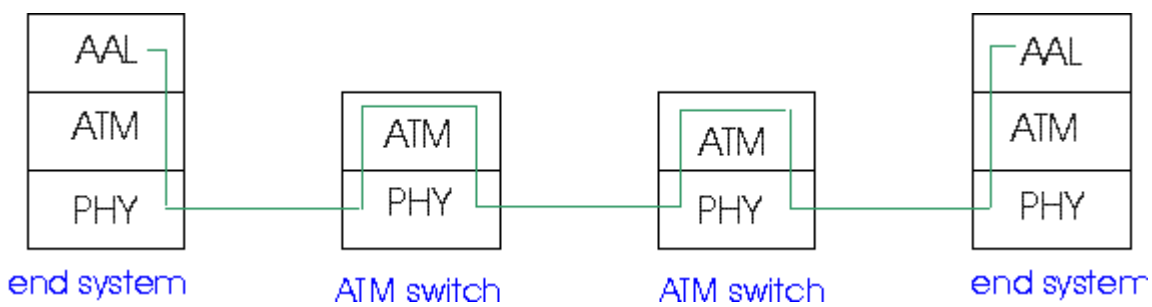

ATM Adaptation Layer (AAL)

Different versions of AAL layers, depending on ATM service class:

- AAL1: for CBR (Constant Bit Rate) services, e.g. circuit emulation
- AAL2: for VBR (Variable Bit Rate) services, e.g., MPEG video
- AAL5: for data (eg, IP datagrams)

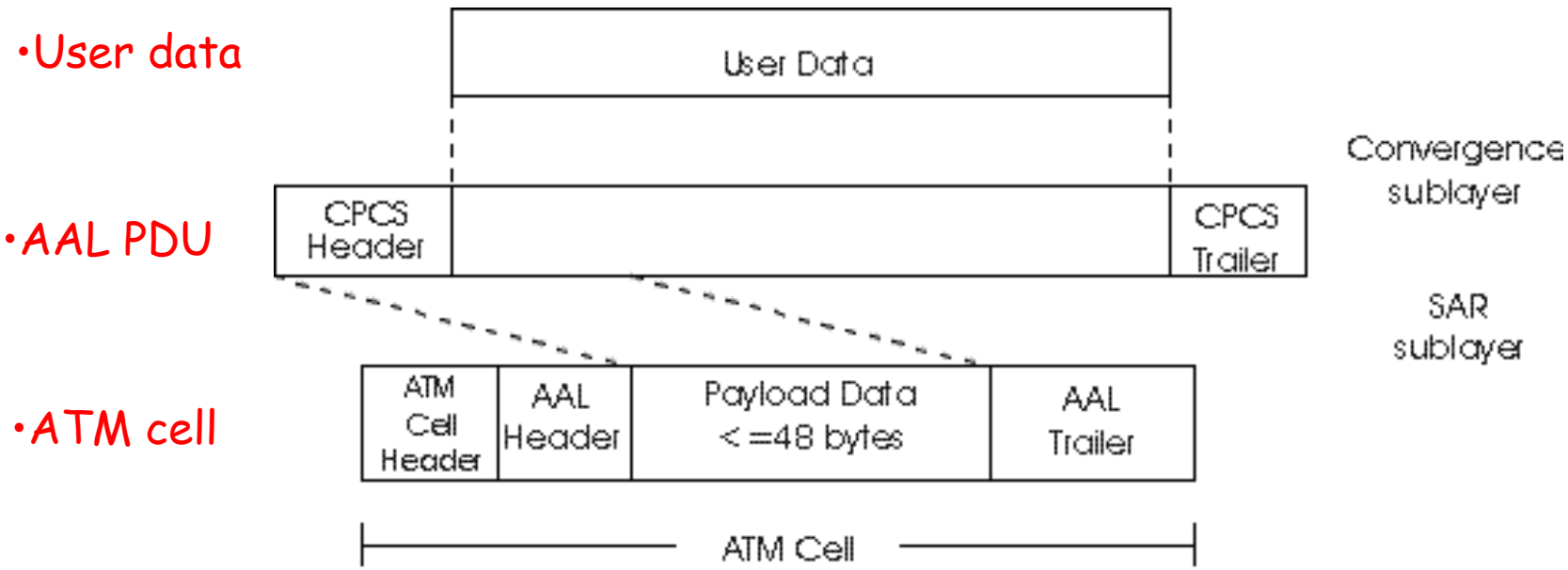

ATM Layer

Service: transport cells across ATM network

- analogous to IP network layer
- very different services than IP network layer

Network Architecture	Service Model	Bandwidth	•Guarantees ?			Congestion Feedback
			Loss	Order	Timing	
Internet	best effort	none	no	no	no	no (inferred via loss)
ATM	CBR	Constant rate	yes	yes	yes	No congestion
ATM	VBR	Guaranteed rate	Yes	Yes	Yes	nocongestion
ATM	ABR	Guaranteed minimum	no	yes	no	yes
ATM	UBR	none	no	yes	no	no

ATM Layer: Virtual Circuits

- VC transport: cells carried on VC from source to dest
  - call setup, teardown for each call *before* data can flow
  - each packet carries VC identifier (not destination ID)
  - *every* switch on source-dest path maintain “state” for each passing connection
  - link,switch resources (bandwidth, buffers) may be *allocated* to VC: to get circuit-like perf.
- Permanent VCs (PVCs)
  - long lasting connections
  - typically: “permanent” route between to IP routers
- Switched VCs (SVC):
  - dynamically set up on per-call basis

ATM VCs

- Advantages of ATM VC approach:
  - QoS performance guarantee for connection mapped to VC (bandwidth, delay, delay jitter)
- Drawbacks of ATM VC approach:
  - Inefficient support of datagram traffic
  - one PVC between each source/dest pair) does not scale (N*2 connections needed)
  - SVC introduces call setup latency, processing overhead for short lived connections

ATM Layer: ATM cell

- 5-byte ATM cell header
- 48-byte payload
  - Why?: small payload -> short cell-creation delay for digitized voice
  - halfway between 32 and 64 (compromise!)

•Cell header

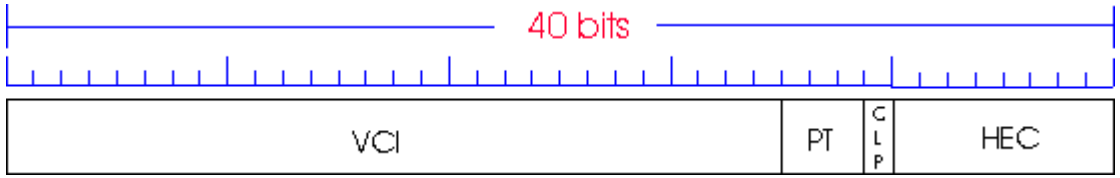

•Cell format

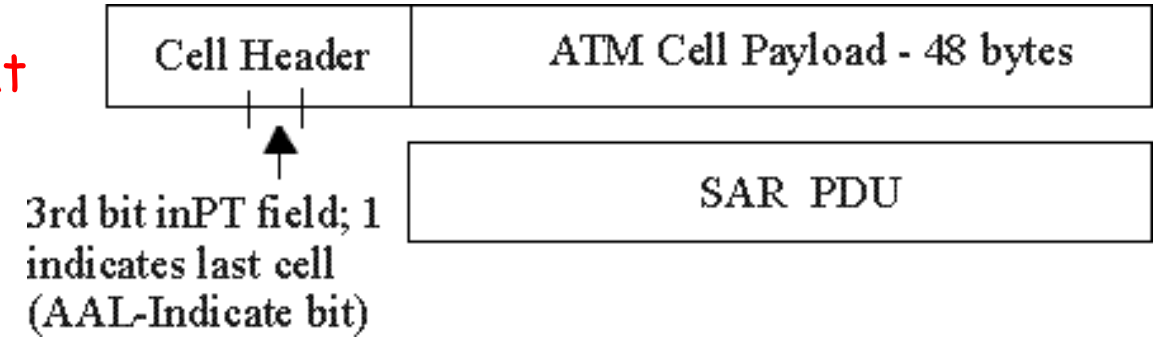

ATM Cell Header

- **VCI:** virtual channel ID
  - will *change* from link to link thru net
- **PT:** Payload type (e.g. RM cell versus data cell)
- **CLP:** Cell Loss Priority bit
  - CLP = 1 implies low priority cell, can be discarded if congestion
- **HEC:** Header Error Checksum
  - cyclic redundancy check

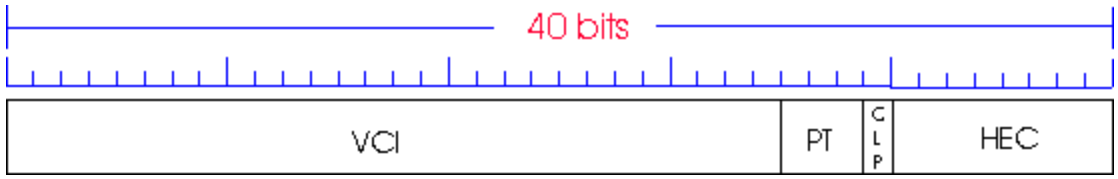

ATM Physical Layer

Two pieces (sublayers) of physical layer:

- Transmission Convergence Sublayer (TCS): adapts ATM layer above to PMD sublayer below
- Physical Medium Dependent: depends on physical medium being used

TCS Functions:

- Header **checksum** generation: 8 bits CRC
- Cell **delineation**
- With “unstructured” PMD sublayer, transmission of **idle cells** when no data cells to send

ATM Physical Layer

Physical Medium Dependent (PMD) sublayer

- **SONET/SDH**: transmission frame structure (like a container carrying bits);
  - bit synchronization;
  - bandwidth partitions (TDM);
  - several speeds: OC3 = 155.52 Mbps; OC12 = 622.08 Mbps; OC48 = 2.45 Gbps, OC192 = 9.6 Gbps
- **TI/T3**: transmission frame structure (old telephone hierarchy): 1.5 Mbps/ 45 Mbps
- **unstructured**: just cells (busy/idle)

Implementing a Switch

Objective is forwarding frames

move packets from incoming to outgoing link

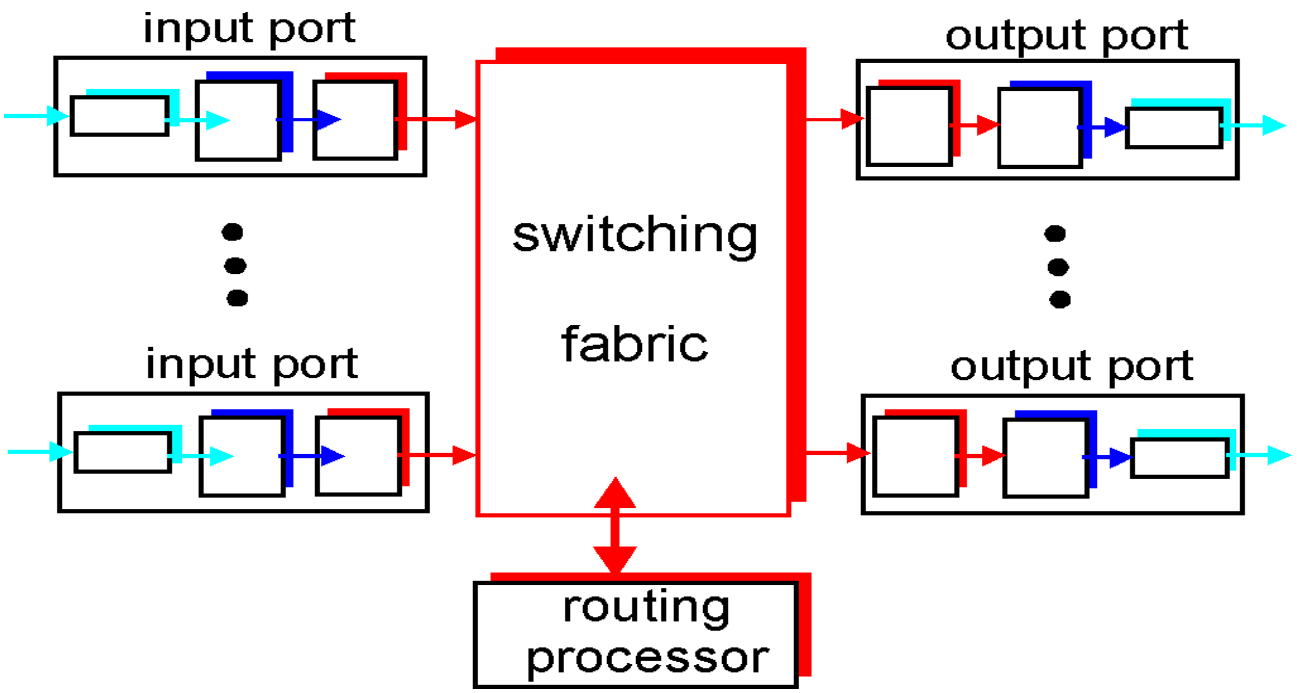

Input Port Functions

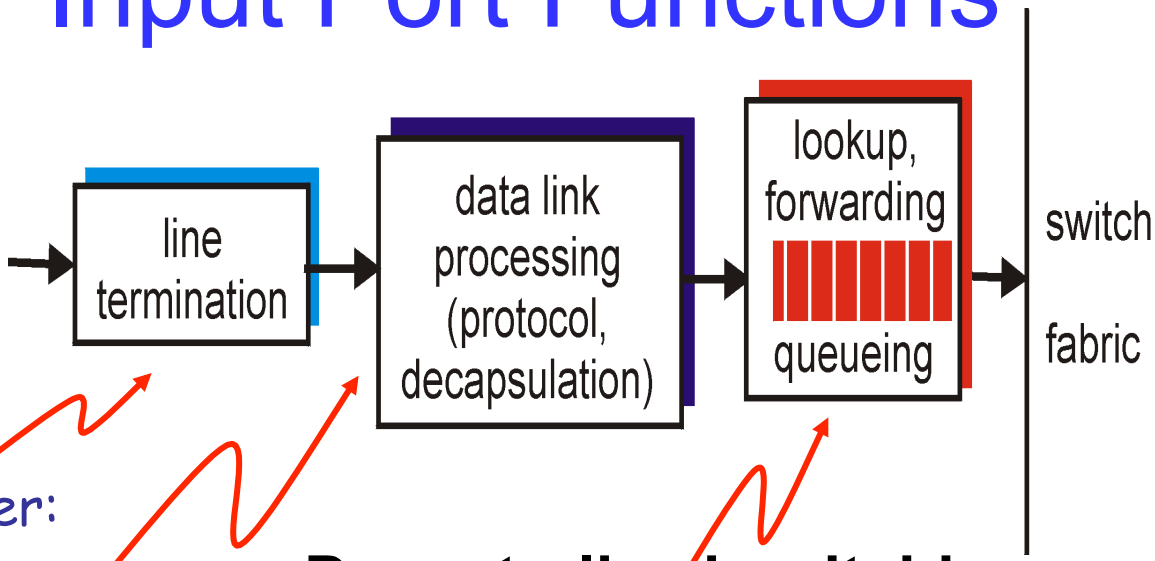

- Physical layer:
- bit-level reception
- Data link layer:
  - e.g., Ethernet
  - see chapter 5

Decentralized switching:

- given datagram dest., lookup output port using forwarding table in input port memory
- goal: complete input port processing at 'line speed'
- queuing: if datagrams arrive faster than forwarding rate into switch fabric

Output Ports

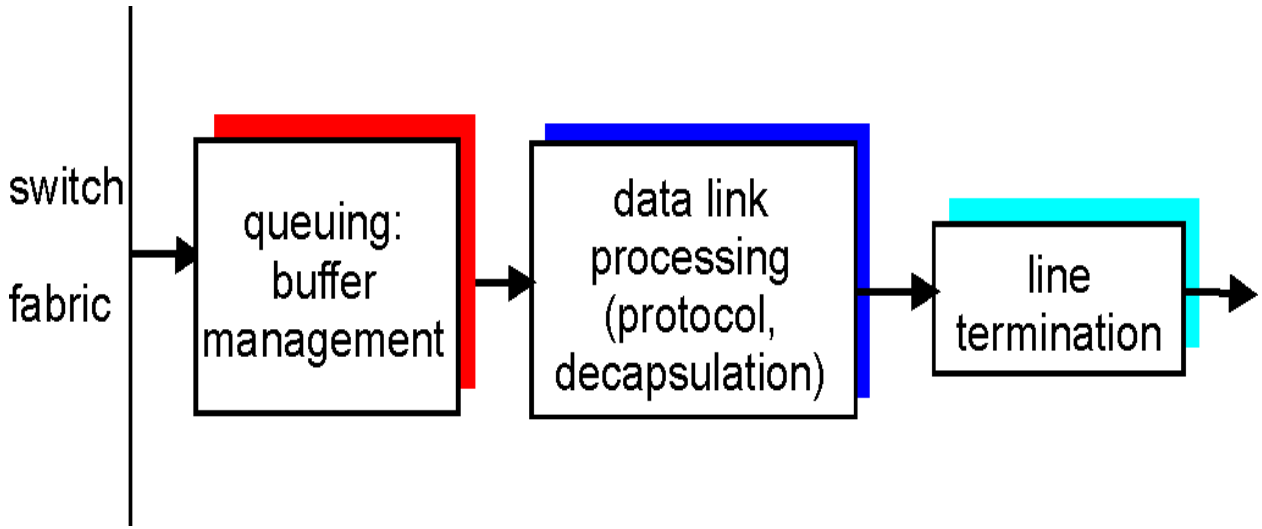

- *Buffering* required when datagrams arrive from fabric faster than the transmission rate
- *Scheduling discipline* chooses among queued datagrams for transmission

Output port queueing

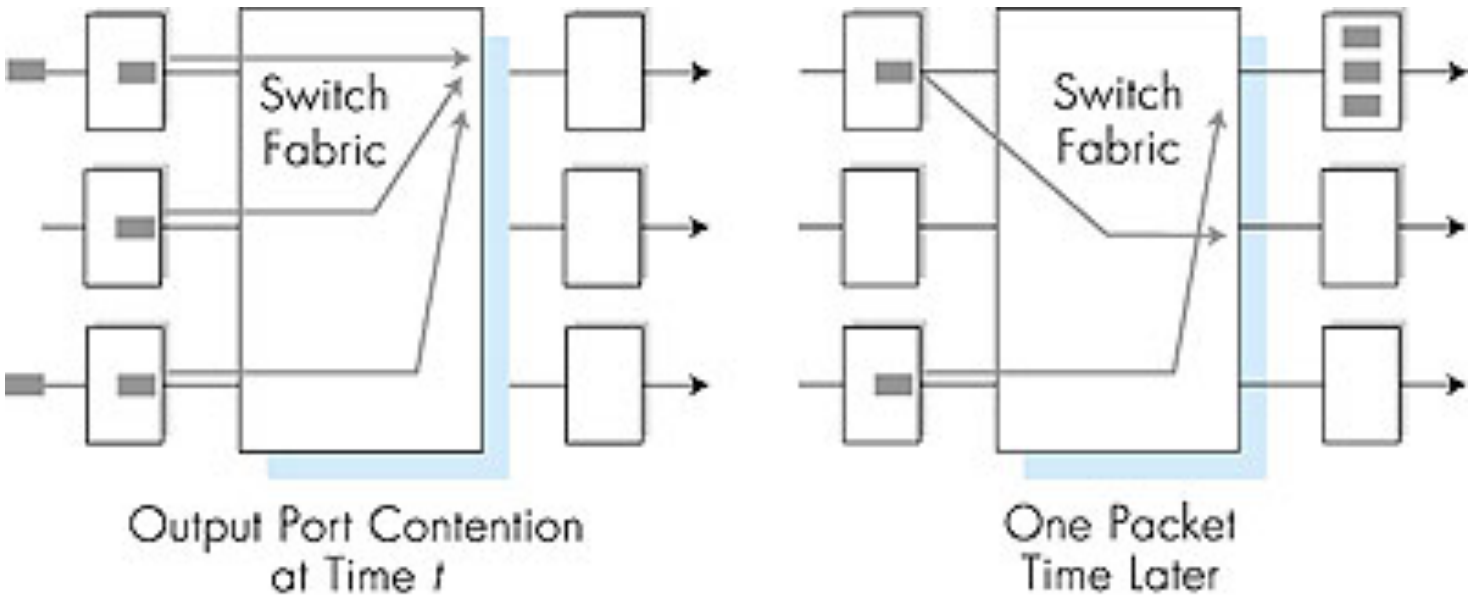

- buffering when arrival rate via switch exceeds output line speed
- *queueing (delay) and loss due to output port buffer overflow!*

Queuing

- Fabric slower than input ports combined -> queueing may occur at input queues
- Head-of-the-Line (HOL) blocking: queued datagram at front of queue prevents others in queue from moving forward
- *queueing delay and loss due to input buffer overflow!*

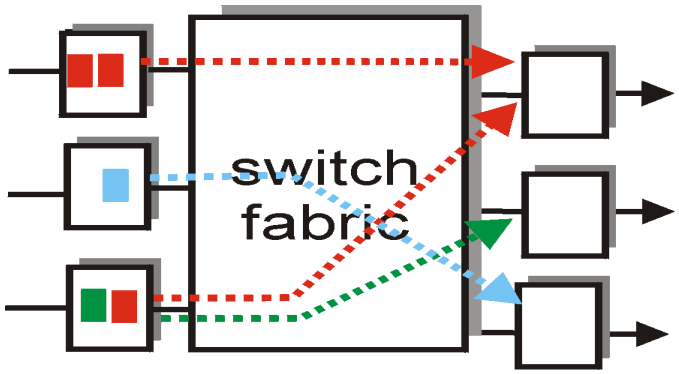

output port contention at time t - only one red packet can be transferred

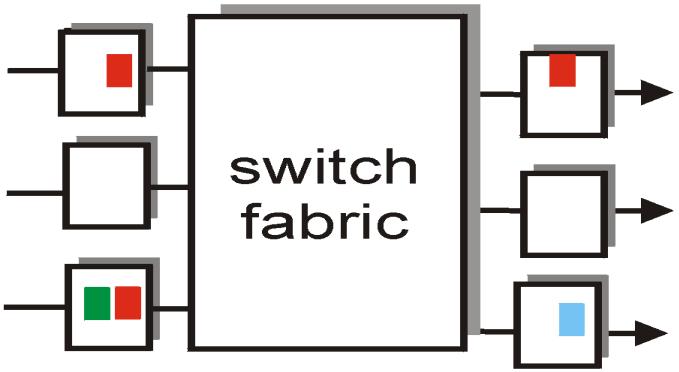

green packet experiences HOL blocking

Three types of switching fabrics

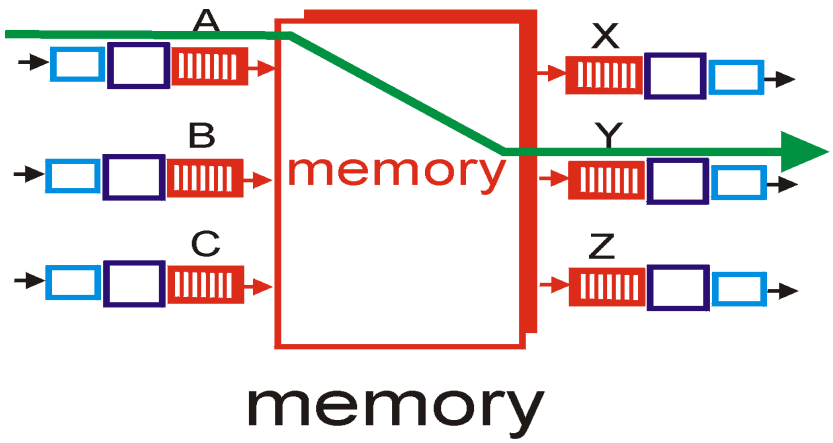

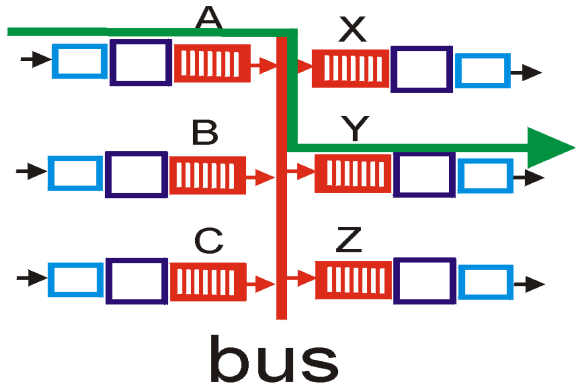

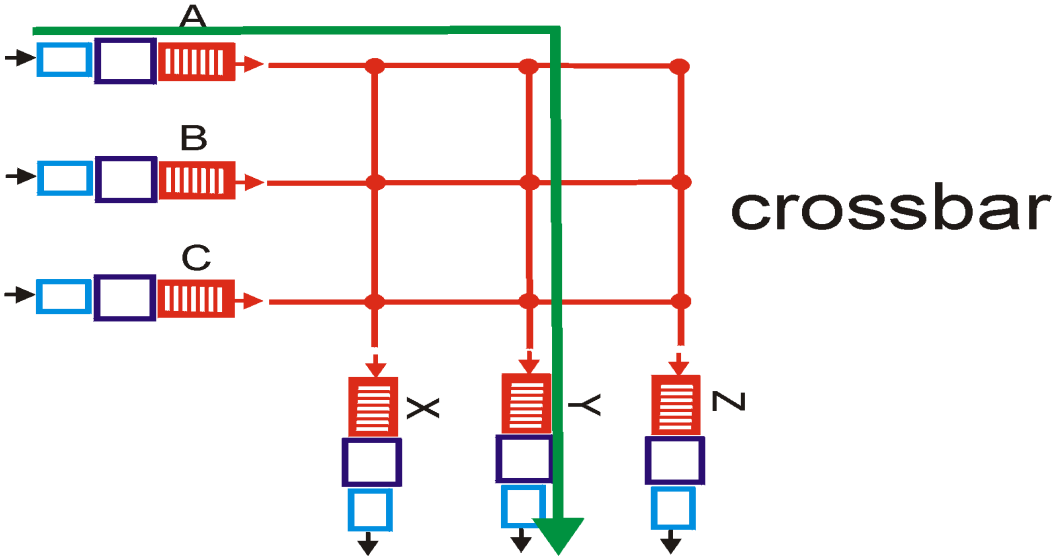

Switching Via Memory

First generation routers:

- traditional computers with switching under direct control of CPU
- packet copied to system's memory
- speed limited by memory bandwidth (2 bus crossings per datagram)

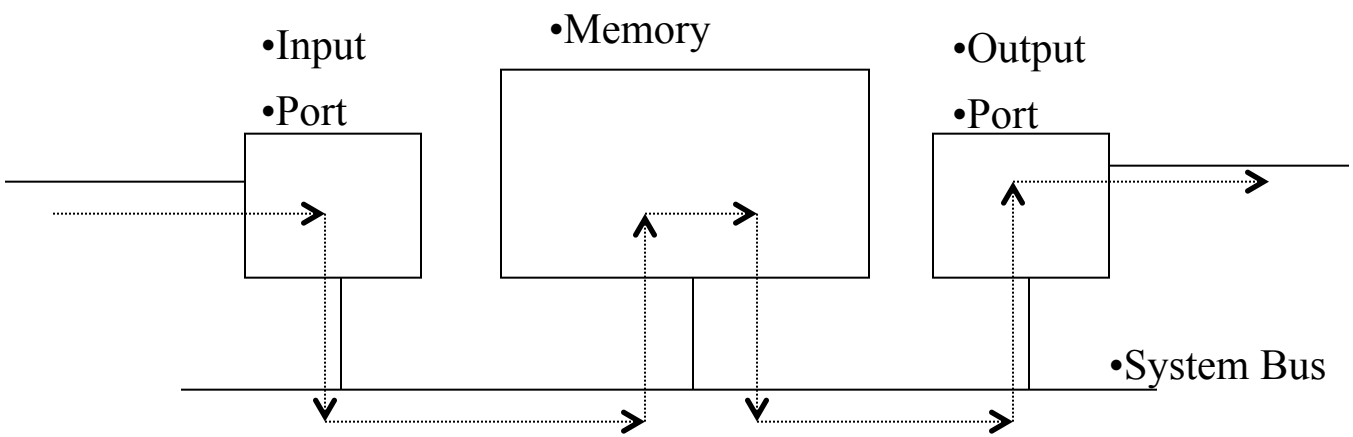

Switching Via a Bus

- datagram from input port memory to output port memory via a shared bus
- bus contention: switching speed limited by bus bandwidth
- 1 Gbps bus, Cisco 1900: sufficient speed for access and enterprise routers (not regional or backbone)

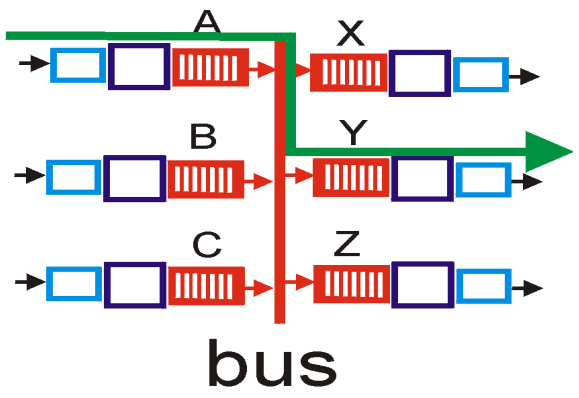

Switching Via An Interconnection Network

- overcome bus bandwidth limitations
- Banyan networks, other interconnection nets initially developed to connect processors in multiprocessor
- Advanced design: fragmenting datagram into fixed length cells, switch cells through the fabric.
- Cisco 12000: switches Gbps through the interconnection network

What's Next

- Read Chapter 1, 2, 3, and 4.1-4.2
- Next Lecture Topics from Chapter 4.1 and 4.2
  - IP
  - Routing
- Homework
  - Due ***Thursday*** in recitation
- Project 2 is Now Posted
  - Now you should be working on Project 2!